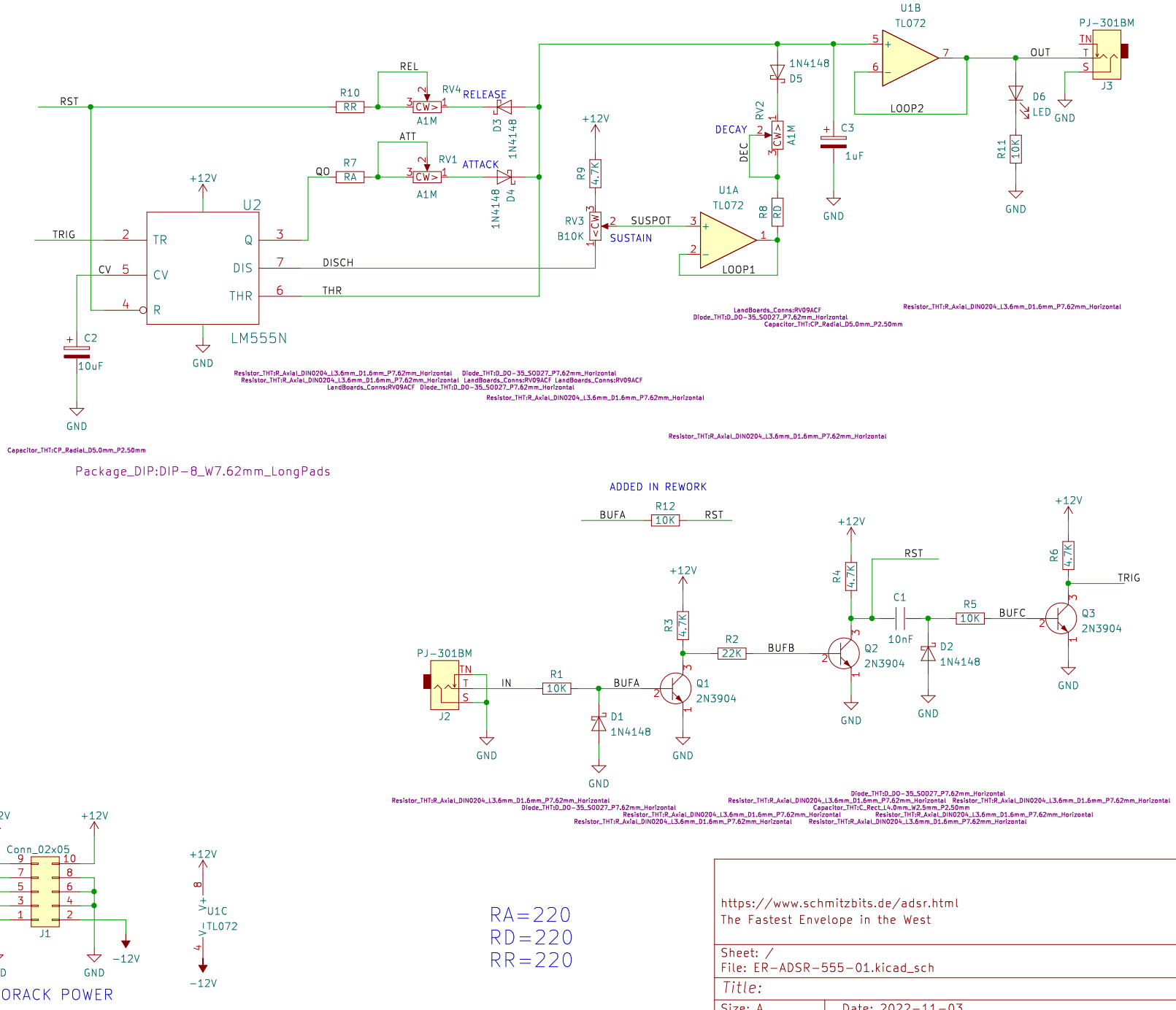
U2
LM555N
TR
CV
R
Q
DIS
THR
TRIG
RST
CV
QO
DISCH
THR
+12V
GND
C2
10uF
R10
RR
R7
RA
REL
ATT
RV4
RELEASE
RV1
ATTACK
A1M
D3
1N4148
D4
R9
4.7K
RV3
B10K
SUSPOT
SUSTAIN
U1A
TL072
LOOP1
R8
RD
DECAY
DEC
RV2
D5
C3
1uF
U1B
TL072
LOOP2
OUT
PJ-301BM
J3
D6
LED
R11
10K
ADDED IN REWORK
BUFA
R12
10K
R3
4.7K
R2
22K
BUFB
R1
10K
IN
J2
D1
Q1
2N3904
R4
4.7K
C1
10nF
D2
R5
10K
BUFC
Q2
Q3
R6
4.7K
Conn_02x05
J1
-12V
EURORACK POWER
U1C
TL072
RA=220
RD=220
RR=220
https://www.schmitzbits.de/adsr.html
The Fastest Envelope in the West
Sheet: /
File: ER-ADSR-555-01.kicad_sch
Title:
Size: A
Date: 2022-11-03
Rev: 1
KiCad E.D.A. kicad (6.0.1)
Id: 1/1