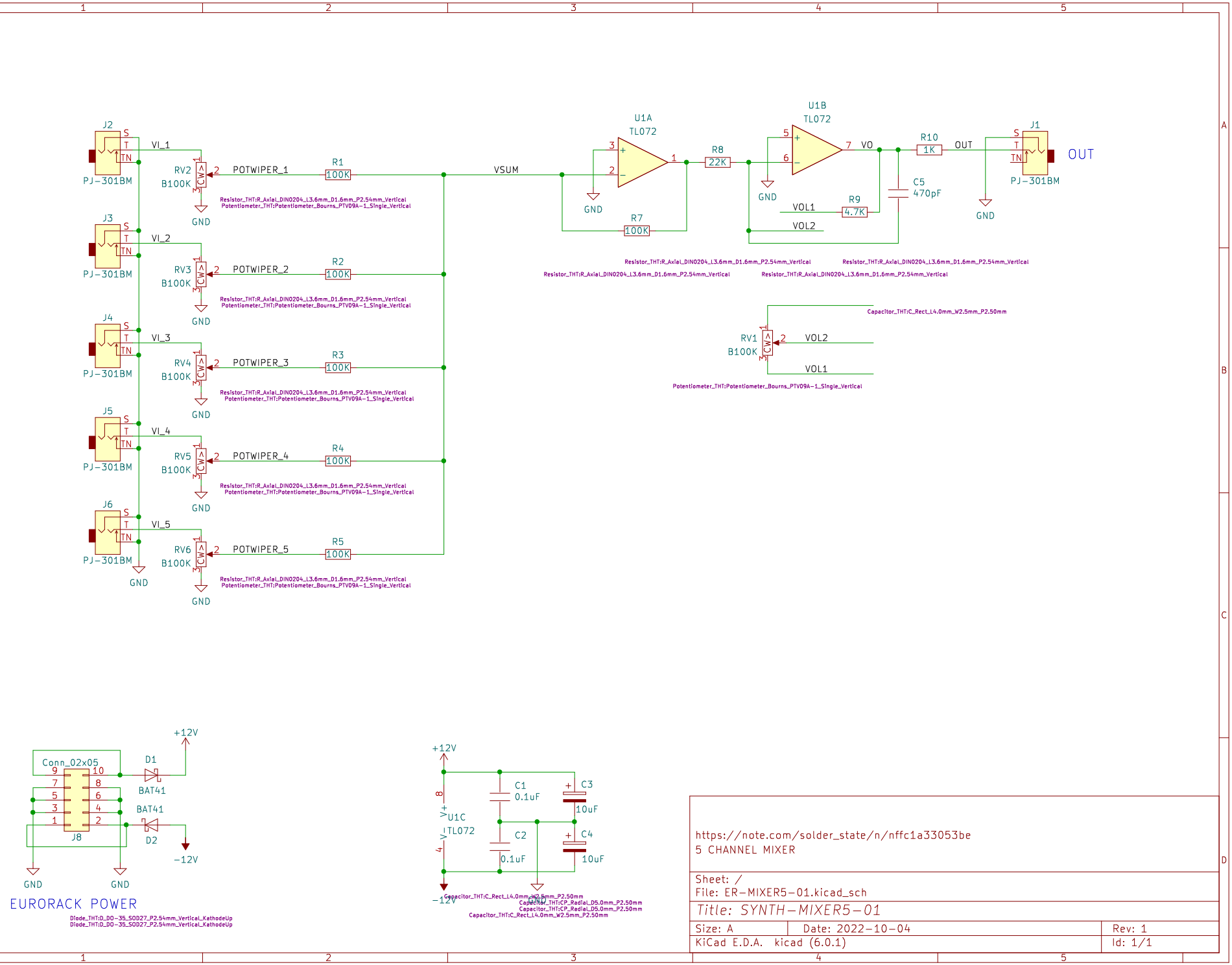
J2
J3
J4
J5
J6
PJ-301BM
VI_1
VI_2
VI_3
VI_4
VI_5
RV2
RV3
RV4
RV5
RV6
B100K
POTWIPER_1
POTWIPER_2
POTWIPER_3
POTWIPER_4
POTWIPER_5
R1
R2
R3
R4
R5
100K
GND
VSUM
U1A
TL072
R7
R8
22K
U1B
TL072
VO
R10
1K
OUT
J1
OUT
C5
470pF
R9
4.7K
VOL1
VOL2
RV1
B100K
Resistor_THT:R_Axial_DIN0204_L3.6mm_D1.6mm_P2.54mm_Vertical
Potentiometer_THT:Potentiometer_Bourns_PTV09A-1_Single_Vertical
Capacitor_THT:C_Rect_L4.0mm_W2.5mm_P2.50mm
Conn_02x05
J8
D1
D2
BAT41
+12V
-12V
EURORACK POWER
Diode_THT:D_DO-35_SOD27_P2.54mm_Vertical_KathodeUp
U1C
TL072
C1
0.1uF
C2
0.1uF
C3
10uF
C4
10uF
Capacitor_THT:CP_Radial_D5.0mm_P2.50mm
https://note.com/solder_state/n/nffc1a33053be
5 CHANNEL MIXER
Sheet: /
File: ER-MIXER5-01.kicad_sch
Title: SYNTH-MIXER5-01
Size: A
Date: 2022-10-04
Rev: 1
KiCad E.D.A. kicad (6.0.1)
Id: 1/1