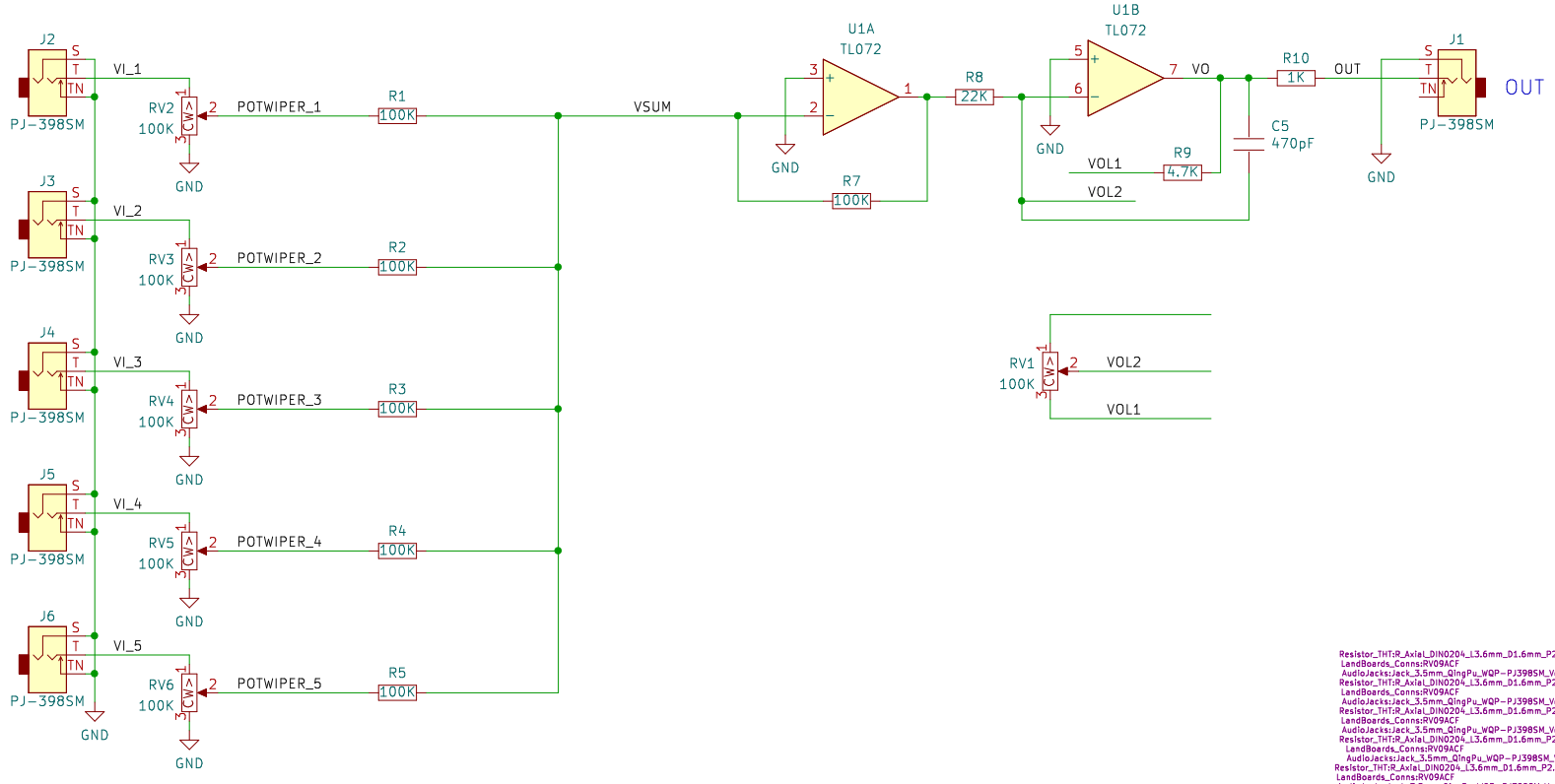

Resistor_THT:R_Axial_DIN0204_L3.6mm_D1.6mm_P2.54mm_Vertical
LandBoards_Conns:RV09ACF
AudioJacks:Jack_3.5mm_QingPu_WQP-PJ398SM_Vertical
Resistor_THT:R_Axial_DIN0204_L3.6mm_D1.6mm_P2.54mm_Vertical
LandBoards_Conns:RV09ACF
AudioJacks:Jack_3.5mm_QingPu_WQP-PJ398SM_Vertical
Resistor_THT:R_Axial_DIN0204_L3.6mm_D1.6mm_P2.54mm_Vertical
LandBoards_Conns:RV09ACF
AudioJacks:Jack_3.5mm_QingPu_WQP-PJ398SM_Vertical
Resistor_THT:R_Axial_DIN0204_L3.6mm_D1.6mm_P2.54mm_Vertical
LandBoards_Conns:RV09ACF
AudioJacks:Jack_3.5mm_QingPu_WQP-PJ398SM_Vertical
Resistor_THT:R_Axial_DIN0204_L3.6mm_D1.6mm_P2.54mm_Vertical
LandBoards_Conns:RV09ACF
AudioJacks:Jack_3.5mm_QingPu_WQP-PJ398SM_Vertical
Capacitor_THT:C_Rect_L4.0mm_W2.5mm_P2.50mm
AudioJacks:Jack_3.5mm_QingPu_WQP-PJ398SM_Vertical
Resistor_THT:R_Axial_DIN0204_L3.6mm_D1.6mm_P2.54mm_Vertical
Resistor_THT:R_Axial_DIN0204_L3.6mm_D1.6mm_P2.54mm_Vertical
Resistor_THT:R_Axial_DIN0204_L3.6mm_D1.6mm_P2.54mm_Vertical
Resistor_THT:R_Axial_DIN0204_L3.6mm_D1.6mm_P2.54mm_Vertical
LandBoards_Conns:RV09ACF

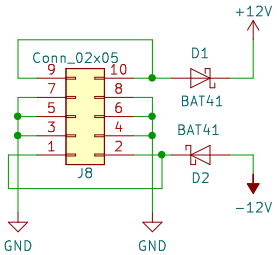

EURORACK POWER

Diode_THT:D_DO-35_SOD27_P2.54mm_Vertical_KathodeUp
Diode_THT:D_DO-35_SOD27_P2.54mm_Vertical_KathodeUp
Connector_IDC:IDC-Header_2x05_P2.54mm_Vertical

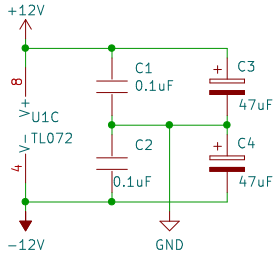

Capacitor_THT:CP_Radial_D5.0mm_P2.50mm
Capacitor_THT:CP_Radial_D5.0mm_P2.50mm
Capacitor_THT:C_Rect_L4.0mm_W2.5mm_P2.50mm
Capacitor_THT:C_Rect_L4.0mm_W2.5mm_P2.50mm

https://note.com/solder_state/n/nffc1a33053be
5 CHANNEL MIXER

Sheet:
File: ER-MIXER5-02.kicad_sch

Title: SYNTH-MIXER5-02

Size: A	Date: 2023-03-06	Rev: 1
KiCad E.D.A. kicad (7.0.0)		Id: 1/1