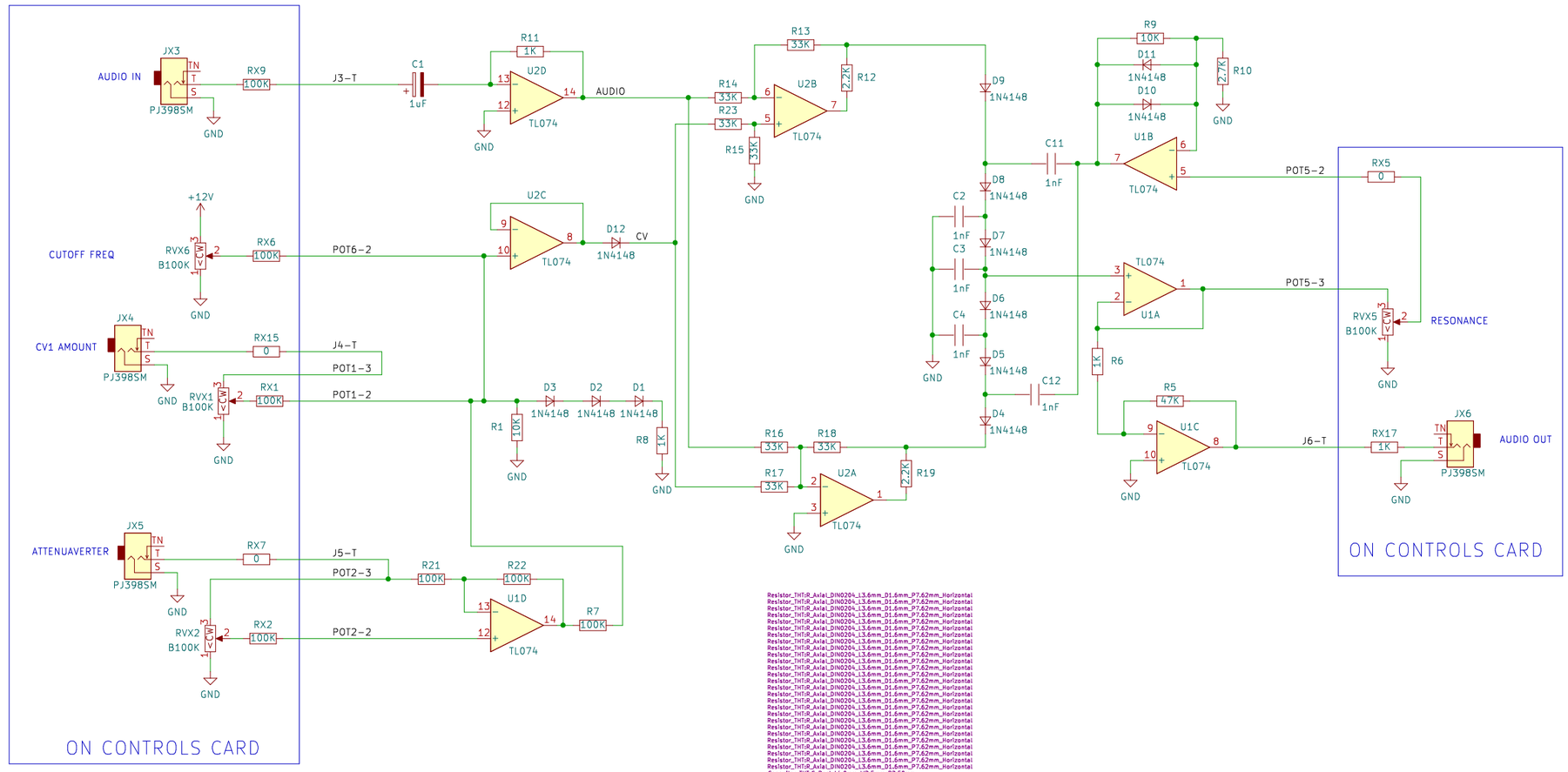

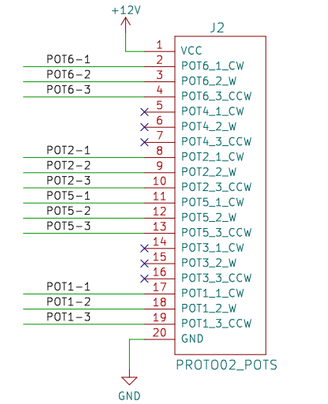

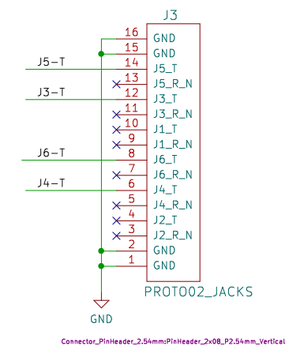

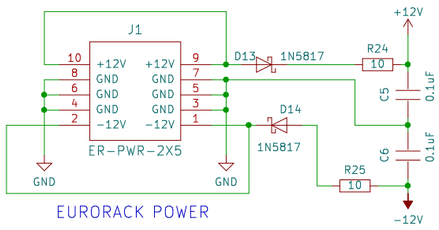

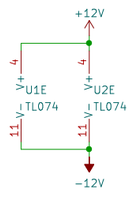

CONTROLS CARD
RV1 = ATTEN ADJ POT
RV2 = ATTENUVERT POT
RV5 = RESONANCE POT
RV6 = CUTOFF ADJ POT
J3 = AUDIO IN JACK
J4 = CV ANALOG IN JACK
J5 = ATTENVERT IN JACK
J6 = AUDIO OUT JACK

Sheet: File: ER-VCF-02-DB.kicad_sch		
Title: VOLTAGE CONTROLLED FILTER		
Size: B	Date: 2023-01-24	Rev: 3
KiCad E.D.A. kicad (7.0.0)		Id: 1/1