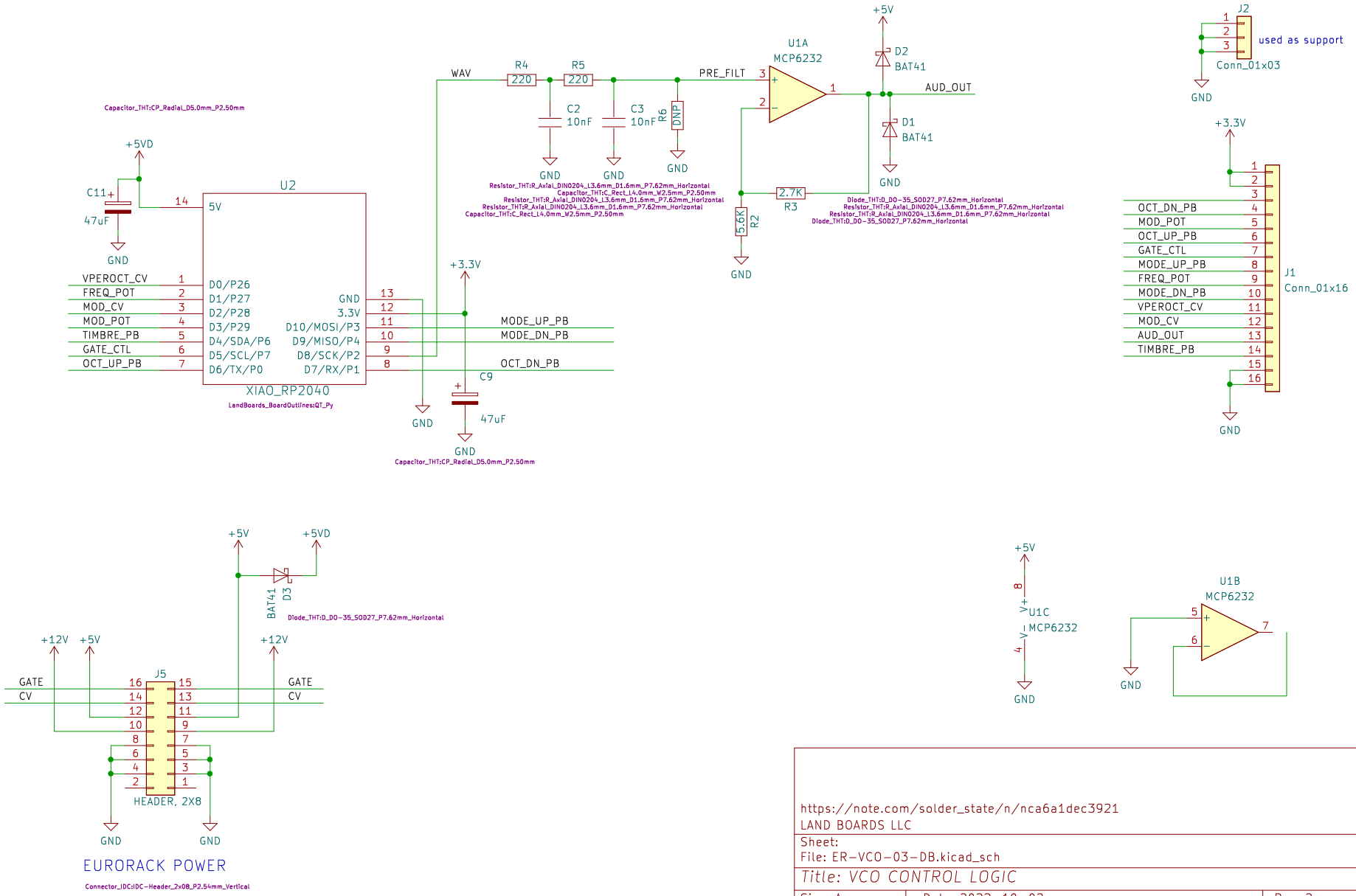

https://note.com/solder_state/n/nca6a1dec3921
LAND BOARDS LLC

Sheet:
File: ER-VCO-03-DB.kicad_sch

Title: VCO CONTROL LOGIC

Size: A	Date: 2022-10-02	Rev: 2
KiCad E.D.A. kicad (7.0.0)		Id: 1/1